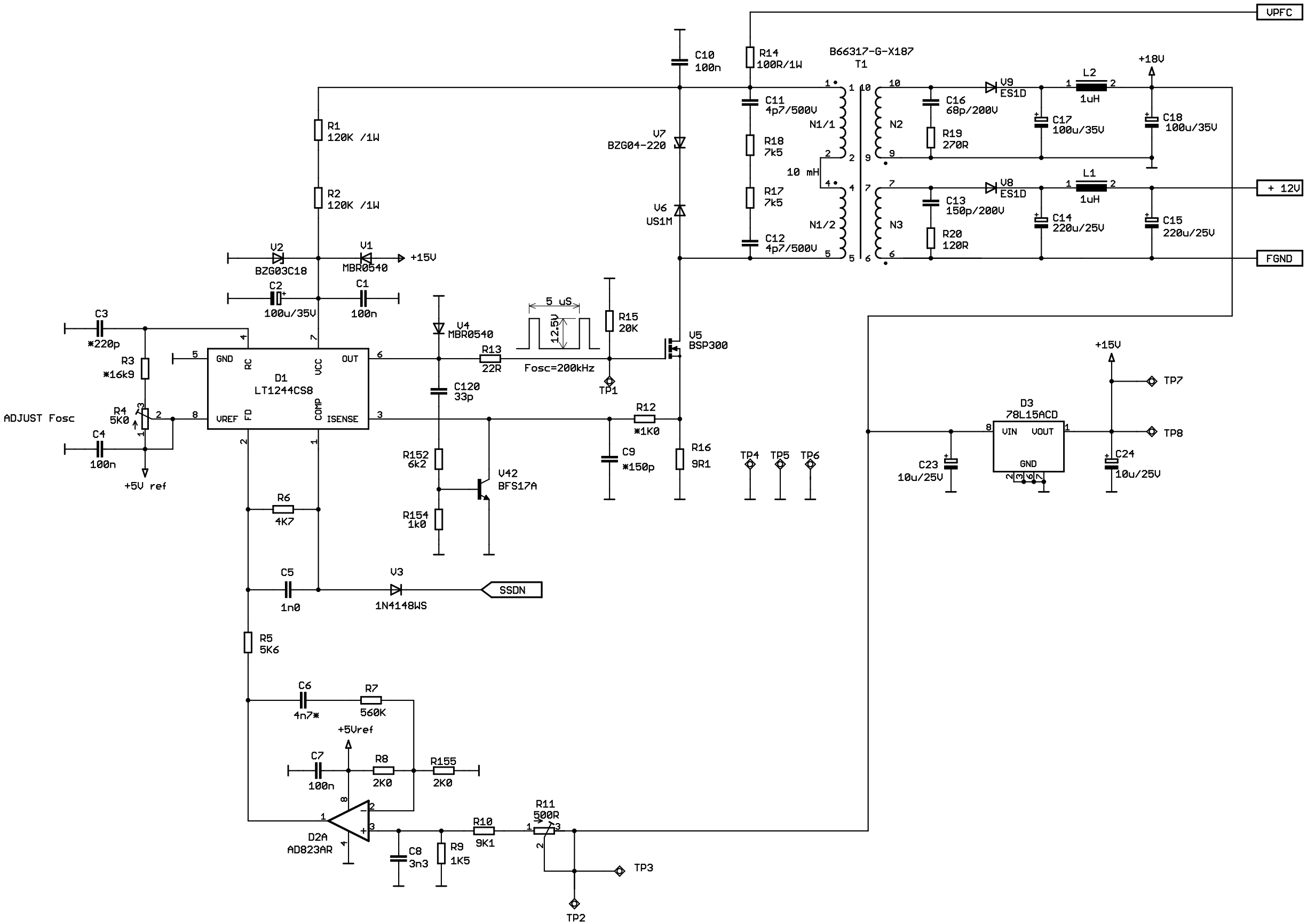

P5

HIGH POWER SUPPLY HPS1

STANDBY SUPPLY